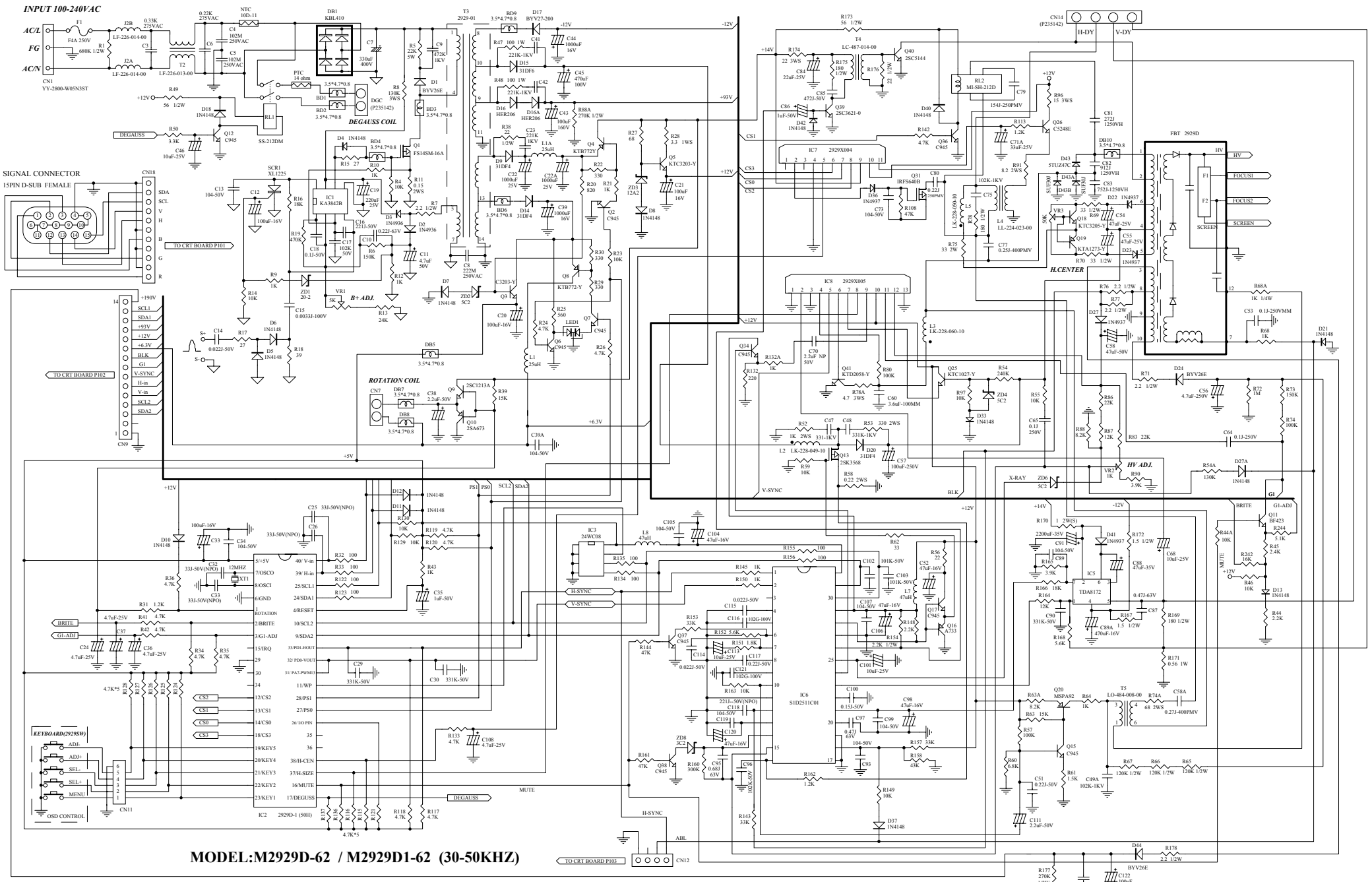
INPUT 100-240VAC
AC/L
FG
AC/N
CN1
YY-2800-W05N3ST
DEGAUSS COIL
SIGNAL CONNECTOR
15PIN D-SUB FEMALE
CN18
TO CRT BOARD P101
TO CRT BOARD P102
B+ ADJ.
ROTATION COIL
CN7
CN9
IC1
KA3842B
IC2
2929D-1 (50H)
IC3
24WC08
IC6
S1D2511C01
IC7
2929X004
IC8
2929X005
IC5
TDA8172
T4
LC-487-014-00
T5
LO-484-008-00
FBT 2929D
CN14
(P235142)
H-DY
V-DY
H.CENTER
HV ADJ.
X-RAY
G1-ADJ
BRITE
MUTE
KEYBOARD(2929SW)
ADJ-
ADJ+
SEL-
SEL+
MENU
OSD CONTROL
CN11
CN12
TO CRT BOARD P103
H-SYNC
V-SYNC
ABL
DEGAUSS
MODEL:M2929D-62 / M2929D1-62 (30-50KHZ)