6. General Specifications:

Electrical Specification:

Voltage	Max. Operating Current	Max. Current
24 V DC	2.0 A	4.0 A

Use only current limiting CSA or UL approved Power Supply.

Operating Temperature: -0 to +60 Degrees Celsius

Weight: 14.2 kg

Features:
Multi-Width Validating Head
Metal Coin-Proof Bezel
Metal Dispenser
Lockable Recycling Cassettes

Items Enclosed:
User Guide
Software Description
Lock Installation Kit, Chassis OPT-MKTBB-LOCK
Mounting Kit for Grounding Connection OPT-MKBB-GND
Wiring Harness OPT-HS-BB-CCNET

Optional: Sensor Box Extractor OPT-HW-FT01

SUZOHAPP

1743 Linneman Road, Mount Prospect, IL 60056 USA
PHONE: 1-847-952-5932 *or* 1-800-239-7017

bill-to-bill@suzohapp.com

http://www.suzohapp.com/Bill-to-Bill

© 2017 SUZOHAPP

SUZOHAPP

Bill-to-Bill Currency Management System

SBB-5510

The Part Number on the Label includes Hardware Part Number and Software Part Number.

Example
BB-1047 AA000000

Software Part Number

Hardware Part Number

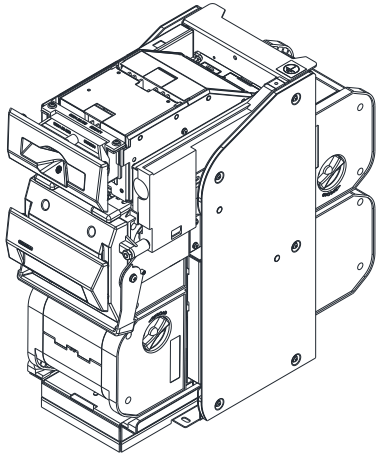

1. Assembly Contents:

Unit	Part No.	Description
Validating Head	MFLV-9013	With Multi-Width Centering Mechanism
Sense -A- Click	FLS-1706U FLS-1706L	Sense-A-Click Sensor Packs
Bezel	MFLB-6101	Metal Coin-Proof Validator Bezel
Bezel	MFLB-6201	Plastic Inner Validator Bezel
Bezel	MFLB-6301	Metal Dispenser Bezel
Housing	BBH-5530	Top Dispenser
Chassis	BBC-0310	Holder for 3 Recycling Cassettes, Dispensing Cassette and Path Switch
Dispensing Cassette	BBD-0610	Metal Bezel with GND
Recycling Cassette	BBR-0111	Lockable, Storage from 80 to 110 Bills
Path Switch	BBS-0110	Separating of Bills
Power Interface	BBP-5713	24 V DC, RS-232

2. DIP Switch Setting:

DIP switches may be accessed by removing the Validating Head and opening the transparent cover at the rear. See Software Description for correct denominations and settings.

SW No.1	ON State	OFF State	Default
SW 1.1	Bill Type 1 Enable	Bill Type 1 Disable	ON
SW 1.2	Bill Type 2 Enable	Bill Type 2 Disable	ON
SW 1.3	Bill Type 3 Enable	Bill Type 3 Disable	ON
SW 1.4	Bill Type 4 Enable	Bill Type 4 Disable	ON
SW 1.5	Bill Type 5 Enable	Bill Type 5 Disable	ON
SW 1.6	Bill Type 6 Enable	Bill Type 6 Disable	ON
SW 1.7	Bill Type 7 Enable	Bill Type 7 Disable	ON
SW 1.8	Bill Type 8 Enable	Bill Type 8 Disable	ON

SW No.2	ON State	OFF State	Default
SW 2.1	Four Way	One Way	ON
SW 2.2	High Acceptance	High Security	ON
SW 2.3	9 600 bps	19 200 bps	ON
SW 2.4	Service	Host Communication	OFF

3. Interface Connector Pinout:

Mating Connector:
Socket 43645-1000 (Molex)
Contact 43030-0008 (Molex)

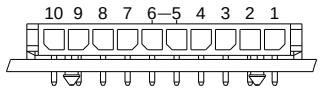

Terminal	Circuit
1	+ 24 V DC
2	+ 24 V DC
3	0 V DC
4	0 V DC
5	GND
6	GND
7	TxD
8	RxD
9	
10	COMM GND

4. Diagnostics:

Chart below lists the validator malfunctions, as indicated by the flashing bezel light:

No. of Consecutive Flashes	Malfunction
1 Green/ Red	COM Port CRC error
2 Green/ Red	Internal CRC error
3 Green/ Red	Improper Memory Stick
4 Green/ Red	Memory Stick is absent
5 Green/ Red	Improper type of Memory Stick
6 Green/ Red	Download error

5. Grounding:
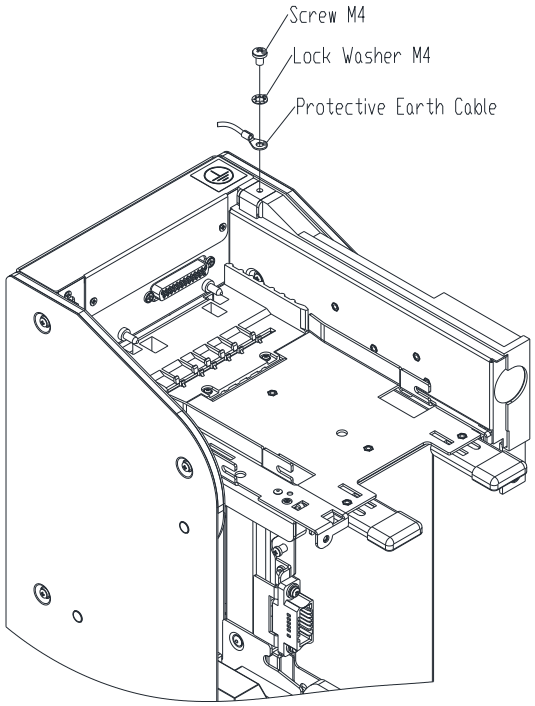
1. Ground terminal must be connected to the host machine ground.
2. Use Mounting Kit OPT-MKBB-GND.
3. Connect grounding cable to screw shown. A copper wire of 14 - 12 AWG may also be used.