1743 Linneman Road, Mount Prospect, IL 60056 USA
PHONE: 1-847-952-5932 *or* 1-800-239-7017

bill-to-bill@suzohapp.com

http://www.suzohapp.com/Bill-to-Bill

© 2019 SUZOHAPP PT# UG-SB-MA1100_A 06/19

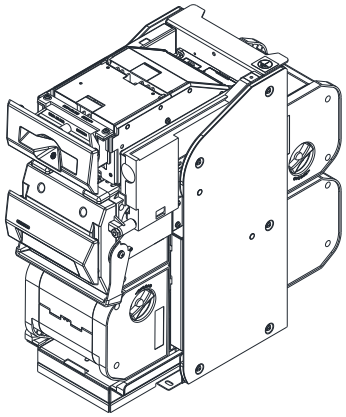

SB-MA1100

Bill-to-Bill Validator

Software Description

1. CURRENCY:

20, 50, 100, 200 Moroccan Dirham (MAD)
(Supported Denomination Set SDS-MAD4-R1)

2. COMMUNICATION PROTOCOL: CCNET

3. COMPATIBILITY:

B2B Hardware	Chassis Software
SBB-xxxx with FLS-1704/1706	BB-BCA04946*

*- the latest version is strongly recommended.

4. DIP SWITCHES SETTINGS:

SW. #1	ON State	OFF State	Default Setting
SW 1.1	20 MAD Enabled	20 MAD Disabled	ON
SW 1.2	50 MAD Enabled	50 MAD Disabled	ON
SW 1.3	100 MAD Enabled	100 MAD Disabled	ON
SW 1.4	200 MAD Enabled	200 MAD Disabled	ON
SW 1.5	Reserved	Reserved	ON
SW 1.6	Reserved	Reserved	ON
SW 1.7	Old 100 MAD Enabled	Old 100 MAD Disabled	ON
SW 1.8	Old 200 MAD Enabled	Old 200 MAD Disabled	ON
SW. #2	**ON State**	**OFF State**	
SW 2.1	Four Way	One Way	ON
SW 2.2	High Acceptance	High Security	ON
SW 2.3	9 600 bps	19 200 bps	ON
SW 2.4	Service	Host Machine	OFF

5. BILL TABLE:

BILL TYPE	DENOMINATION
0	20 MAD
1	50 MAD
2	100 MAD
3	200 MAD

6. OPTIONAL ACCESSORIES AND DOCUMENTS:

- Supported Denomination Set: - Part # SDS-MAD4-R1
- CCNET Protocol Description: - Part # MAN-CCNET
- Test Software: - Part # OPT-SW-CCNET