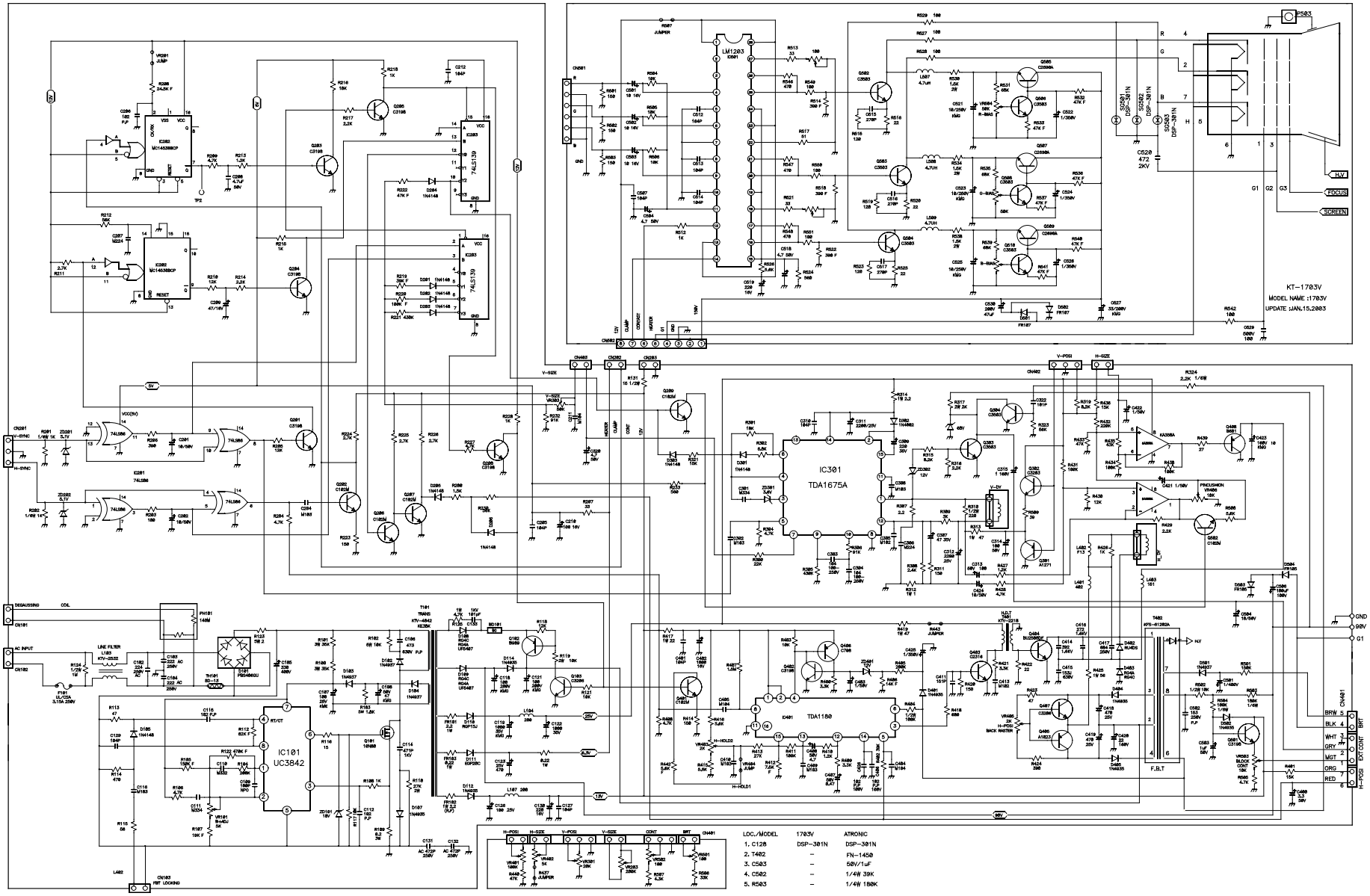

LOC./MODEL	1703V	ATRONIC
1. C128	DSP-301N	DSP-301N
2. T402	–	FN-1450
3. C503	–	50V/1uF
4. C502	–	1/4W 39K
5. R503	–	1/4W 180K